This is the peer reviewd version of the followng article:

Microwave generators, transmission, and interaction with different materials / Leonelli, C. - In: Microwave Chemistry / [a cura di] Giancarlo Cravotto and Diego Carnaroglio. - Berlin : De Gruyter, 2017. - ISBN 9783110479935. - pp. 31-52 [10.1515/9783110479935-003]

De Gruyter
Terms of use:

The terms and conditions for the reuse of this version of the manuscript are specified in the publishing policy. For all terms of use and more information see the publisher's website.

19/10/2026 08:52

(Article begins on next page)

Cristina Leonelli

Part II Theoretical foundations and Instructional experiments

3. Microwave generators, transmission and interaction of with different materials

Chapter contents

3.1 Introduction

3.2 Microwave Generators

3.2.1 Magnetron

3.2.2 Solid state generators

3.2.3 Other micorwave sources

3.3 Wave Propagation

3.3.1 Waveguide modes

3.4 Microwave Chambers

3.4.1 Single mode cavities

3.4.2 Multimode cavities

3.4.2.1 Heating Uniformity

3.4.3 Leakage Suppression

3.5 Antennas

3.6 Radiant microwave applicators

3.7 Monitoring and control of microwave applicators

3.7.1 Temperature measurement

3.7.2 Pressure measurement

3.7.2.1 Expanding the range of parameters achieved by microwave reactors

3.7.3 Power control

3.8 Maintenance

3.9 Safety issue

3.10 Conclusions

3.11 References and suggested readings

3. Microwave generators, transmission and interaction of with different materials

The purpose of this chapter is to provide chemists with some basic elements from the construction of a microwave applicator to enable a better use of commercial apparatuses and, eventually, their modifications. The equations underlying the choice of the dimensions of the applicator operating at the most used microwave frequency of 2.45 GHz, are not even presented. The most common geometries adopted for commercial microwave applicators used in the chemical lab are reported, while specific machinery are treated in the other chapters (Chapter……) and in several dedicated book [1-4].

Some of the semplification adopted to write this chapter are addressed to those chemists who still see the "magic" in microwave heating of reactants. The physical understanding of the microwave applicator as well as the interaction of the electromagnetic field with matter (see Chapter 2) should help the reader to fully understand what is happening when heating chemicals with microwaves. As with many instruments, if a system is very complicated to operate, it generally becomes either a glorified shelf to store things on or a headache to those having to operate it. The easier a microwave system is to use and understand, the better off you will be.

The reader is strongly advised to enrich the basic knowledge this chapter is attempting to provide [5–7].

3.1 Introduction

In a high frequency heating process, the high frequency waves heat the lossy dielectric and/or the magnetic materials in the complete volume by penetrating into the material, depending on the penetration depth of the waves. Provided the material is not too thick, the high frequency waves transfer more or less the same amount of energy to every volume element of the material, resulting in a homogeneous temperature increase. Theoretically this would give every volume element the same temperature. In a practical situation when the material to heat is positioned within an empty microwave applicator, the surface of the material would loose heat to the ambient atmosphere, which is not heated by the high frequency waves. Therefore, the surface temperature is reduced, resulting in a temperature profile where the highest temperature is in the inside, while the lowest temperature is on the surface of the material (Figure 3.1). This temperature profile is inverse to the one of conventional or radiative heating processes as those adopted in resistance muffle furnaces or oil baths.

This peculiar temperature profile creates problems when deciding for the position of the temperature sensor. If the temperature sensor will be positioned on the surface of the sample being heated by microwave, it means that the warmest surface is monitored while the hottest is not. In these conditions there will be another problem which is simply explained as follows.

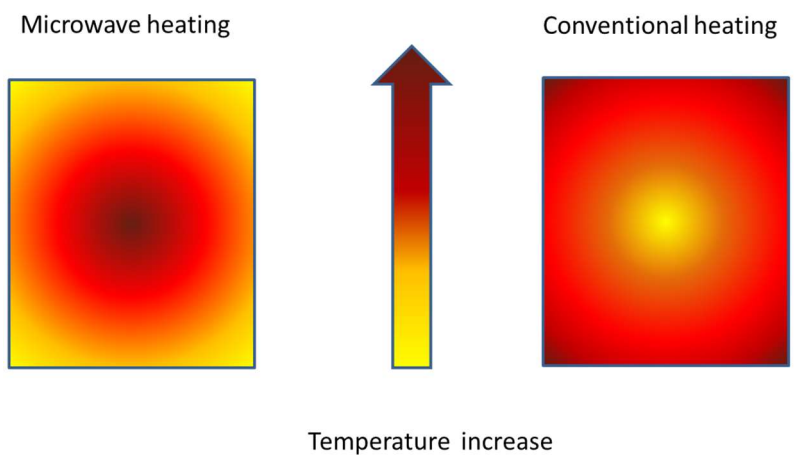

Fig. 3.1: Temperature distribution for conventional and dielectric heating.

High frequency heating is governed by the dielectric and/or magnetic properties of the material. These properties depend on the frequency, and temperature.

The dielectric properties of most of the chemical compounds are mainly dependent on temperature, whereby the coupling is increased as the temperature increases. These materials are prone to a thermal runaway effect that is initially caused by low temperature differences in the material. Those areas that have a slightly higher temperature than the surrounding material take up more energy due to better coupling to the high frequency waves. This results in a faster temperature increase, which in turn leads to even better coupling and increased energy take-up, and so on (Figure 3.2). This thermal runaway can result in local destruction or even melting of the material and its container.

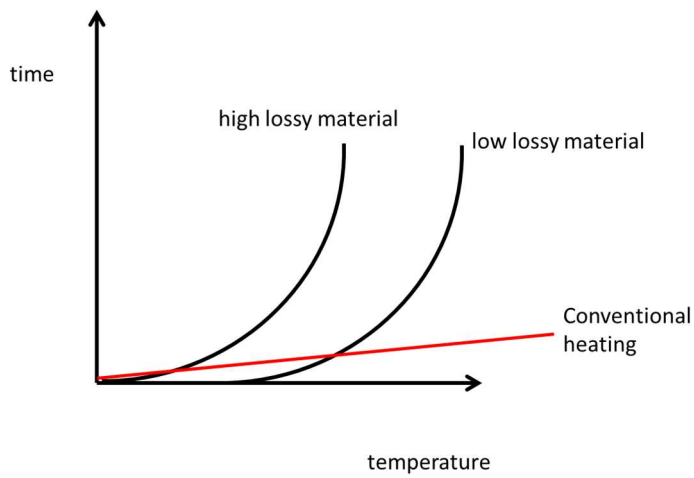

Fig. 3.2: Temperature profile during the thermal runaway phenomenon for two different materials: the more lossy one start increasing temperature some time before the low lossy one. Conventional heating is reported as reference.

Besides volumetric heating, microwave heating offers a number of advantages such as [8-11]:

- selective material heating;
- rapid heating;
- non-contact heating;
- quick start-up and stopping of microwave irradiation so that the heating process can be precisely controlled;
- portability of equipment and processes;

- high heating efficiency (efficiency of 80% or higher can be achieved);
- microwave heating is silent and does not generate exhaust gas.

It has also disadvantages such as:

- the capacity of its power generator is limited to about 100 kW or less;
- electrical discharge easily occurs with an object material containing solid or powder metal.

In order to realize a proper heating process using microwave irradiation, there is the need to build an applicator or a microwave processing system: generator, applicator, and control systems. While the basic components are simple, the interaction of materials with microwave fields and changes in fundamental material properties during processing make design and development of microwave processes very complex. This complexity may be dealt with using an integrated approach with a process design team consisting of the materials and process engineer, the microwave equipment manufacturer, and an electromagnetic specialist.

This chapter identifies basic but key considerations in generator, applicator and control systems, leaving equipment selection and design, and numerical process simulation to engineers.

3.2 Microwave Generators

3.2.1 Magnetron

The type of microwave generator most frequently used is the magnetron vacuum tube, or simply magnetron. Magnetrons were developed in the 1950s for radar applications and have been used for microwave heating since the discovery of this application for high frequency waves.

Magnetrons are produced with an output power ranging from 200 W to 60 kW or even higher. The majority of the magnetrons are produced with an output power between 800 W and 3000 W for laboratory microwave ovens. Differently from the magnetrons used for domestic ovens, in the case of laboratory equipment the microwave power is continuously erogated to better control the heating cycles.

Due to the mass production of magnetrons with a power of about 800 W to 1200 W, the price for these magnetrons is comparatively low. Therefore, these magnetrons are often preferred also when the total output power reaches 3000-3600 W, cases in which the conbination or two or more magnetrons is a more economically affordable solution.

During operation the magnetrons must be cooled to prevent overheating. Magnetrons with a power up to about 2 kW are usually air-cooled, while those with a higher power are usually water cooled, requiring water re-circulation units. Those magnetrons also require the use of special protection equipment against reflected power that could overheat and destroy the magnetron. Low power magnetrons are more robust and can be operated without the protection equipment.

3.2.2 Solid state generators

Since the ‘70s another technology was proposed for the construction of microwave generator, the solid state microwave generators [12]. Only recently, the potential market value of solid-state microwave heating systems, in particular for domestic microwave-ovens, triggered several companies to develop, patent and commercialize this technology [13]. The solid state microwave heating (S^2MH) technology offers several advantages over magnetrons, in various microwave heating applications:

- frequency and phase variability and control

- low input-voltage requirements
- compactness and rigidity
- reliability
- better compatibility with other electronic circuitry (and with the Internet-of-Things in the future).

On the other hand, S^2MH generators are more sensitive to power reflections (unless protected by expensive ferrite isolators), and their efficiency is yet lower than that of magnetrons. The full utilization of the S^2MH advantages (e.g. the frequency variation during the process) requires higher levels of system design and process control (note that sometimes resonance tracking may couple to hotspots and cause damage).

Though technology-wise the S^2MH solution might be preferable in various applications, the main question has remained the expected price gap. The cost predictions are yet subjected to uncertainties, such as the market response to the new technology and the level of mass demand for the S^2MH products.

3.2.3 Other miccrowave sources

There are many other types of microwave generators, like power grid tubes, klystrons, klystrodes (a combination of tetrode power grid tube and klystron), magnetrons, crossed-field amplifiers, traveling wave tubes, and gyrotrons. None of these generator types are used for industrial microwave heating as the costs are too high compared to magnetrons.

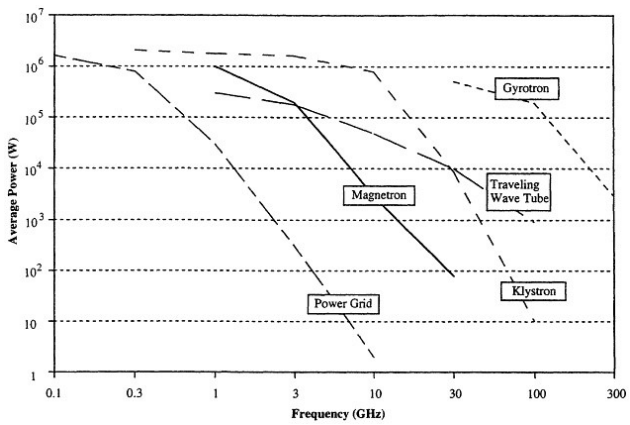

Fig. 3.3 Power vs frequency limits of microwave generators.

It is instructive to show device performance range on a power vs frequency plot, as in Figure 3.3, for a number of diffrent microwave generators.

In addition to power and frequency, other performance factors are important to specific applications. Gain, linearity, noise, phase and amplitude stability, coherence, size, weight, and cost must also be considered [6]. Concerning the cost, reader should know that is is usually given as device cost and cost per watt of power generated. These costs, also the cost of the ancillary equipment such as power conditioning, control circuitry, transmission line, and applicator must be added.

3.3 Wave Propagation

Once microwaves are generated, they should be transported to the chamber where the interaction with the sample/reactants lead to the proper heating process. Well, microwave propagation in air or in materials

depends on the dielectric and the magnetic properties of the medium. There are a lot of complex equations to describe the propagation of electromagnetic waves at the microwave frequency, but they are far from the scope of this Chapter.

One thing should be clear in the mind of the reader, in order to propagate the microwave, the medium should not interact with the electromagnetic field otherwise the amplitude of the wave decreases exponentially as it propagates i.e., wave energy is dissipated during the propagation. For the isotropic medium, one remarkable property of the wave is that it carries an equal amount of energy in the electric and magnetic fields.

For what said in Chapter 2, the transmission line should be made from metal to assure almost perfect reflection and zero adsorption.

The transmission lines are build in such a way that the wave carries an equal amount of the electric and magnetic energy and that the wave impedance stays constant in the propagation direction. These are intrinsic properties of and are true as long as the forward and the backward travelling wave are separate. However, these conditions no longer hold when both the forward and backward travelling waves exist simultaneously. It is a duty of the constructor to chose the proper geometry for the transmission line and the proper medium in order to minimize the power dissipation along the transmission path.

3.3.1 Waveguide modes

Metallic waveguides can be divided into three types (Figure 3.4). For the transverse electromagnetic (TEM) wave, all fields are transverse. It is an approximation of the radiation wave in free space. It is also the wave that propagates between two parallel wires, two parallel plates, or in a coaxial line.

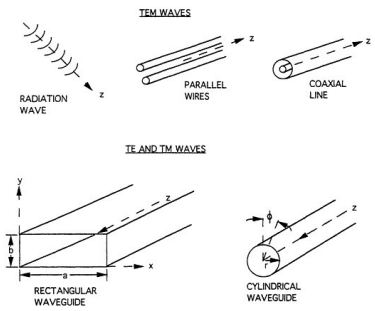

Fig. 3.4 Waveguides - TEM, TE, and TM waves.

The parallel wires, or more precisely, twisted pairs, and the coaxial lines are used in the telephone industry. The transverse electric (TE or H) wave and the transverse magnetic (TM or E) wave are those in waveguides, which are typically hollow conducting pipes having either a rectangular or a circular cross section. In the TE wave, the z component of the electric field is missing, axed in the TM wave, the z component of the magnetic field is missing. Complicating the matter further, each TE and TM wave in a waveguide can have different field configurations. Each field configuration is called a mode and is identified by the indexes m an n. In mathematics, those indexes are the eigenvalues of the wave solution.

Field distributions for various modes of propagation in rectangular and cylindrical waveguides are reported in Figures 3.5 and 3.6 [5]. In the figures, electric fields are represented by solid lines and magnetic fields by dashed lines and wave propagation is always in the z direction. TEmn and TMmn modes are considered in rectangular waveguides and TEnl and TMnl modes are considered in cylindrical waveguides, where the

indices m, n, and 1 are the order of the modes. The field distributions in Figures 3.5 and 3.6 are quite complex. In general, at a conducting surface, electric field lines are normal to the surface, and magnetic field lines are parallel to it. Away from the surface, all field lines follow continuity.

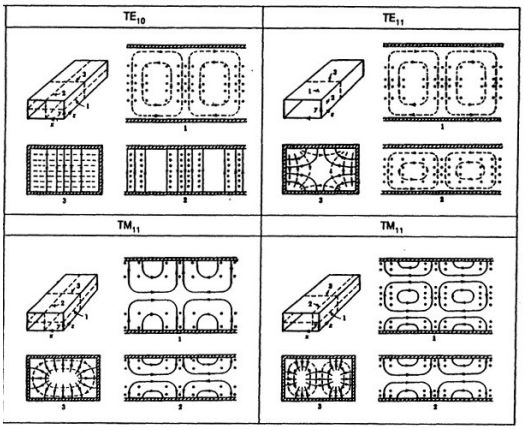

Fig. 3.5 Field distributions and key expressions of calculation for modes in rectangular waveguides.

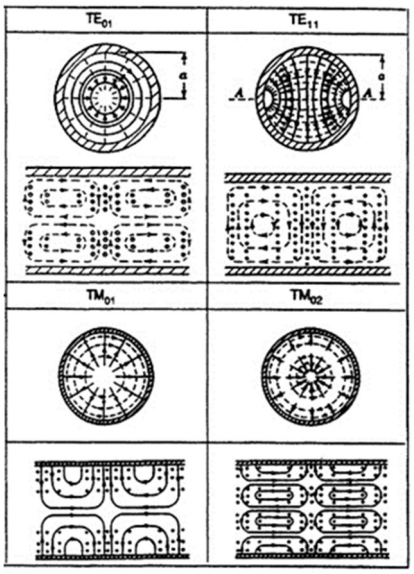

Fig. 3.6 Field distributions and key expressions of calculation for modes in cylindrical waveguides.

Waveguides propagate microwave of different frequency, each constructor will optimize the geometry of the waveguide to transport microwave energy limiting its dissipation. As an example, to propagate the 2.45 GHz wave, a rectangual waveguide, indicated also as WR 340 with dimensions: 3.4 inch [86.36 mm] x 1.7 inch [43.18 mm], is necessary.

3.4 Antennas

Microwave antennas can substitute waveguide to transfer the electromagnetic field energy from one point to another. These devices are designed for telecommunication microwave systems in all common frequency ranges from 4 GHz to 60 GHz. When used to transfer energy with the main goal to reach localized heating, their geometry is more simplified since the signal does not need to be perfectly reproduced as in telecommunication [14].

Microwave antennas can be directly inserted into the reaction vessel, as it will be explained in Paragraph 3.6 Radiant microwave applicators.

3.5 Microwave Chambers

Simply stated, microwave chambers or cavities are the part of an applicator that are designed to heat a material by exposing it to a microwave field in a controlled environment. The objective is to cause a controlled interaction between the microwave energy and the material to occur under safe, reliable, repeatable, and economical operating conditions. The electromagnetic wave is transferred from the generator to the cavity by the waveguide, so each cavity should have at least one entrance, often protected by a microwave transparent materials hence called “window”, for the microwave.

In order to keep microwave radiation inside, the microwave cavity is built from massive metal often covered by a microwave transparent polymer for cleaning pursues only.

Microwave energy may also be combined inside the cavity with other energy sources, such as hot air, infrared, and steam, in order to achieve special results. Microwave cavities may also be designed to permit controlled interaction under a variety of ambient conditions, ranging from vacuum to high pressure and humidity. These latter features could also be realized for the reactors rather than for cavities. Reactors, usually made from glass or Pyrex® vessels, are located inside the microwave cavity, can be of various shape and size and can bear the temperature and pressure probes. In the cavities of microwave oven for chemical uses, vacuum to high pressure and humidity are kept within the reactor to avoid the contamination and degradation of the chamber.

In general, two different types of microwave chambers or cavities can be distinguished: single mode and multimode cavities. In single mode cavities a single standing wave pattern is generated, while in multimode cavities a large number of resonant modes is supported.

3.5.1 Single mode cavities

The standing wave that is supported by a single mode cavity depends on the frequency and the dimensions of the cavity. Various wave patterns exist and are differentiated by the number and position of the maxima of the electric and magnetic field. The technically most important wave patterns are the TE10 and TM01 mode (Figure 3.7). The TE10 mode is supported in a rectangular cavity, having the maximum of the field intensity in the middle of the cavity. In a cylindrical cavity, the TM01 mode is supported, having the maximum of the field intensity in the axis of the cavity.

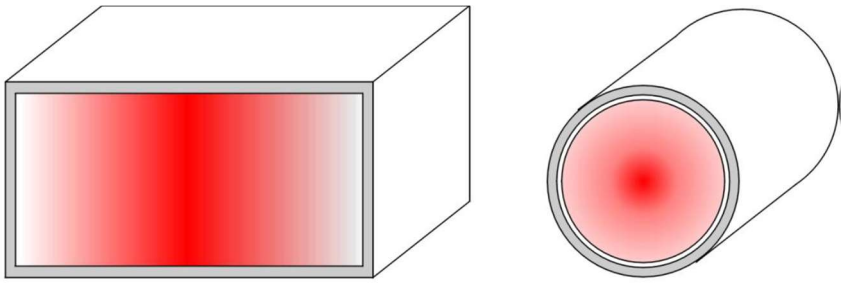

Fig. 3.7 Wave pattern in different single mode cavities (left side: TE10 mode, right side: TM01 mode).

In their simplest form, single-mode applicators consist of a section of waveguide operating at a frequency near cutoff. They usually have had holes or slots cut in them to let product in or out. In more-demanding applications, they may consist of resonant, high Q cavities. Some advantages of single-mode applicators follow:

- High fields are possible.

- The applicators can operate in the standing or traveling wave configurations.
- Fields are well defined.
- Fields can be matched to product geometry.
- The applicators are useful for heating both low-loss and high-loss materials.
- The applicators are compatible with continuous product flow.
- High efficiency is possible.

Taking the advantage that very high electric field strengths can be achieved and can be calculated, the knowledge of the electromagnetic field configuration enables the material under treatment to be placed in the position of the maximum electric/magnetic field. This results in a high absorption of the incident wave.

Despite these advantages, the use of single mode cavities in technical applications is limited due to size restrictions of the cavities. The cross section of the cavities for a specific wave pattern depends on the frequency. For a certain frequency, the cross section is fixed and may not be altered without changing the wave pattern. Therefore, single mode cavities are mainly used for comparatively small products.

In a multimode cavity the superposition of the large number of resonant modes that are supported by the cavity is used to generate a comparatively even microwave field in the useful volume of the cavity. Therefore, it is advantageous to generate as many different resonant modes as possible to improve the homogeneity of the electromagnetic field.

3.5.2 Multimode Applicators

Multimode cavities are not limited in their dimensions and therefore very large heating chambers can be realized. The advantage of the multimode chamber is the even microwave field (either electric or magnetic) that enables the heating of large or complex shaped products. In comparison to single mode cavities, the multimode systems have higher output power combined with a relatively low electric field strength or density, resulting in lower heating rates.

Key features of multimode ovens include:

- suitability for bulk processing applications;
- oven dimensions that are often determined by product dimensions;
- moderate to high efficiency;
- adaptability to batch or continuous product flow;
- performance that is less sensitive to product position or geometry;
- good uniformity that may require motion of product or hybrid heating.

Multimode applicators are often used for processing bulk materials or arrays of discrete material, whose overall dimensions are too large (larger than the wavelength of the operating frequency) to permit consideration for use in a single-mode oven. These applicators, in their simplest configuration, take the form of a metal box that is excited (driven) at a frequency well above its fundamental cutoff frequency. For example, the common home microwave oven typically has internal dimensions on the order of 12 to 16 in., while the wavelength is 4.8 in. The larger dimension corresponds to a cutoff frequency of about 400 MHz as compared with the operating frequency of 2.450 GHz.

Because the dimensions of the enclosure are very large when expressed in terms of the free-space wavelength of the operating frequency, a large number of standing-wave modes can exist at or very near the operating frequency inside the cavity (Figure 3.8). To establish a reasonably uniform electric field strength throughout the cavity, it is desirable to excite as many of these modes as possible. When multiple modes are excited, heating nonuniformity is minimized even when the field perturbing effects of the materials being processed are present.

A peculiar application of multimode cavities for sample preparation and for synthetic applications is the “single reaction chamber technology” [15]. Microwaves are irradiated inside a pressurized stainless steel vessel were different geometries of vials placed in a rack allow for multiple purposes synthesis (for details, see commercial products: Ultraclave, Ultrawave and Synthwave from MLS-Milestone).Multimode applicator design involves a number of basic design parameters. They include uniformity of heating, required microwave power, applicator size, leakage suppression, and required performance characteristics.

Abbiamo una bella figura per due diverse geometrie di camera?

Fig. 3.8 Wave pattern in multimode cavities.

3.5.2.1 Heating Uniformity

Uniform heating is difficult to obtain in a multimode oven. This difficulty arises from the unpredictable way in which the parameters affecting uniformity change with time. As a result, a number of techniques, in addition to excitation of multiple standing-wave modes, are used to promote uniform heating. They include metallic mode stirrers to ensure that all the possible modes are excited; surface scanning to direct the energy at regions of interest; product motion; and, in some cases, hybrid heating using conventional heating to replace surface losses.

In the typical chemical lab microwave oven, that is to say a batch applicator, product motion may be introduced in a variety of ways that include rotation, orbital motion, and linear (vertical or horizontal) translation.

Since many chemical reactions modifies the dielectric and magnetic properties of the batch during their advancement, it is also important to manage the microwave-power handling capability under no-load conditions. This no-load conditions,interpreted as the conditions when the microwave cavity is empty or contains small amount (below to what indicated by the producer) of sample, are critical when the output microwave power is high as in the multimode cavities.

It is essential that an applicator be capable of operating under no-load conditions without electric field breakdown and without leakage for at least a sufficient time to let equipment and personnel safety devices shut the system down. Each constructor utilized special precautions, one these being the "lossy" (high ") walls to suppress leakage. Under no-load conditions, the lossy walls act as parasitic loads that help reduce field strength in the cavity, thus reducing the risk of destructive arcing.

3.5.3 Leakage Suppression

Suppression of microwave leakage from microwave oven doors and product openings is required for personnel safety and to reduce electromagnetic interference. Although these are two very different issues, they must be dealt with simultaneously by one choke or suppression runnel design. The current safety standard for microwave ovens is an emission specification that limits emissions at a distance of 5 cm from the surface of an oven to a maximum of 5 mW/cm^2. Safety standards are discussed in more detail in a later section of this chapter.

Leakage can usually be suppressed by means of reactive chokes, provided that the other dimension of the opening is less than approximately one-half of a wavelength. Good examples of these types of openings are the door seals for industrial and conventional home microwave ovens and slot openings to permit ingress and egress of thin belt wed web materials processed in industrial microwave ovens.

3.6 Radiant microwave applicators When rectangular waveguide are opend in a sequence of properly designed slots on a side, they are defined “slotted waveguide”. This peculiar geometry of the waveguide is capable of emitting microwaves all along its length whit a final effect that the irradiation is similar to a “shower” (Figure 3.9).

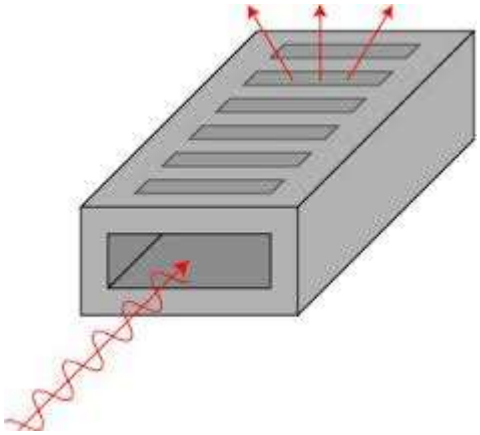

Fig. 3.9 Slotted waveguide indicating the entrance of the microwave radiation and the direction of the emission from one slot as an example. All the slots irradiate microwaves.

The slotted waveguides have been commonly used to feed microwaves within large multimode cavities, but they are also used for chemical reactors. In particular, when the slots are cut so that to irradiated radially toward a centre, as reported in Figure 3.10, the reacting vial can be uniformely heated.

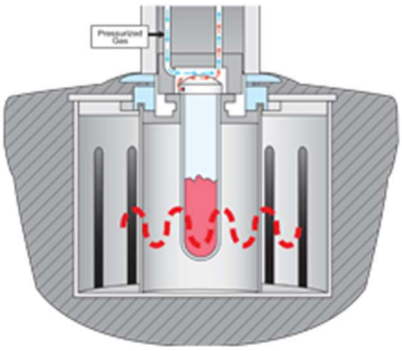

Fig. 3.10 Slotted waveguide bend around a reacting vial in a microwave applicator dedicated to chemical synthesis (Credit to CEM, DISCOVER & EXPLORER SP FEATURES at http://it.cem.com/e107/discover-sp-features.html).

A side from these most common slotted waveguides, a movable and easy to use radiant structure in the shape of an antenna inserted in a long tube of protecting and microwave transparent material has been patented for chemical preparations (Figure 3.11) [14]. The antenna can be inserted inside the reacting material which is contained in a common glass vessel. This device can be used for activating chemical reactions in a homogeneous or heterogeneous phase, under either continuous or pulsed mode. Additionally, if the reactor is properly designed, this device can be used also in a condition of high pressure.

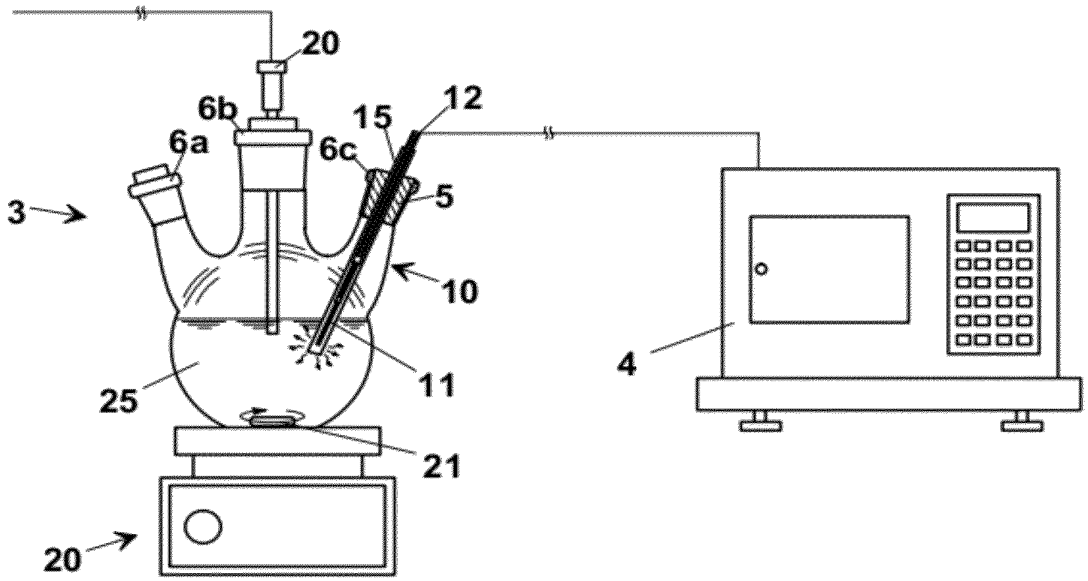

Fig. 3.11 Microwave heating apparatus with (4) microwave source, operatively connected to (10) an end of an antenna at a connector (12). The end of the antenna (11) is inserted into (3) a reaction container with apertures (6a, 6b and 6c), and reacting material (25). The antenna has been coated with a sheath (15) that prevents from a direct contact with the reacting material. To optimized mixing, a magnetic bar (21) and a stirrer (20) can be used.

The arrangement of the antenna in the reacting material provides a quick and effective heating, but unfortunately low power microwave irradiation can be used. Furthermore, it is possible to increase considerably the control and the efficiency of a chemical-physical processes to which the heating technique above described is applied. This allows also to provide a considerable energy saving with respect to apparatus consisting of a vessel within a multimode cavity. Homogeneity of the temperature profile with the vessel can be reached using a magnetic stirrer.

3.7 Monitoring and control of microwave applicators

Microwave applicators are the place where an electromagnetic field interacts with a material: the various responses that may take place have been already listed in Chapter 2. The overall heating process requires, if possible, a continuous monitoring and control.

Nowadays, the most performant equipment used in the chemical lab are fully monitored and perfectly controlled, but unfortunately this is not the case of adjusted domestic oven or self-assembled units.

In the following the temperature, pression and power monitor and control are discussed.

3.7.1 Temperature measurement

The most important parameter to be measured in thermo processing units is the temperature. While it is usually sufficient for the control of conventional process to know the furnace temperature, for dielectric heating, the product temperature is usually much higher than the furnace temperature. Therefore, it is

usually necessary to measure the product temperature for control of dielectric heating units. Either contact- or non-contact measurement techniques may be used to measure the product temperature.

The temperature of a body is its thermal state and is regarded as a measure of its ability to transfer heat to other bodies. The indication of how a numerical value may be associated with the temperature requires a review of the laws of thermodynamics, which is certainly beyond the scope of this document. To establish procedures for accurate temperature measurement, temperature may be defined as a quantity that takes the same value in two systems that are brought into thermal contact with one another and are allowed to come to thermal equilibrium. Based on this definition, it may be suggested that for accurate temperature measurements, both the body and the measuring device should make good thermal contact and both bodies should be in thermal equilibrium. These conditions are difficult to take place during microwave heating due its intrinsic rapidity. Nevertheless, an effort in the direction of monitoring the temeprature and from this measure control the output power of microwave irradiation to control the entire heating process shuld be done.

Figure 3.12 identifies various temperature-measuring instruments and their ranges.

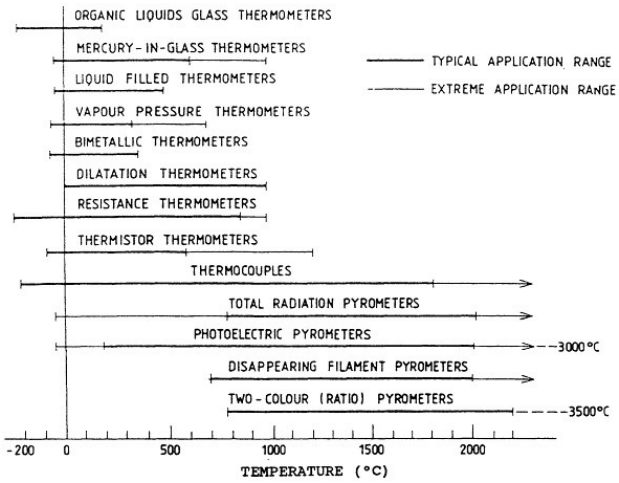

Fig. 3.12 Classification of temperature-measuring instruments.

Probably the most common contact temperature measurement method is the thermocouple. Unfortunately, the use of thermocouples in dielectric heating is limited as the electric field of the units may interfere with the measurement. It is possible to shield the thermocouple to reduce the problem, but for certain applications with high electric field strengths, the shielded thermocouple may still be unsuitable (Fig. 3.13).

A contact temperature measurement method that was specially developed for dielectric heating and similar applications is the so called optical fibre thermometer. This technology is based on a special sensor material that emits or reflects light depending on its temperature. The sensor material is placed on the tip of a glass fibre that transmits the emitted or reflected light to a control unit which calculates the temperature of the sensor. Due to the optical measuring principle, the measurement is not affected by the electromagnetic field of dielectric heating.

The most common non-contact temperature measurement method is the pyrometer. These units detect the infrared light that is emitted by any material and calculate the surface temperature based on the adjusted emission factor. Unlike the contact measurement techniques, pyrometers can only measure the surface temperature.

When comparing temperature measurements of conventional and dielectric heating processes, the inverse temperature profile of dielectric heating has to be considered for correct interpretation of the results.

(a)	(b)	(c)

Fig. 3.13 Images of sensors frequently adopted in microwave irradiated environments: a) infrared pyrometer (Credits to Sensortherm GmbH; b) Pt shielded thermocouple; c) pressure sensors (Credits to Anton-Paar GmbH).

3.7.2 Pressure measurement

The suitability of microwaves for heating liquids in sealed reactors was soon employed for various chemical processes [16]. Microwave digestion of samples has become a fundamental technique of dissolution of samples prepared for analysis in the liquid form. The sealed vessels resistant to strong acids, the availability of temperatures up to 300°C (equilibrium pressure to 100 bar), and the very high rate of microwave heating have enabled shortening the cycle of samples preparation for analytical tests sometimes from many days to several minutes [17]. Similarly, in the organic synthesic reactions occurring under such conditions a surprising increase was observed in the reaction yield and rate, often combined with a marked improvement in the product purity due to the specific catalytic effect [18]. The most important here is the ability to quickly obtain a high temperature as a result of microwave heating, as was described for nanopowder production in hydrothermal and solvothermal processes [16]. Basically, the high pressure autogenously produced in these conditions can play a positive role only if some substrates are in the gaseous form, although it is a rare case in laboratory practice. Therefore, if only high boiling solvents can be used, safety considerations militate in favour of their use. However, also other factors should be taken into account, such as, for instance, the difficulty in dissolving many valuable reagents in some solvents, or the difficulty in removing the remaining high-boiling solvents from products. Therefore, water, and, optionally, its solutions with different mineral or organic additives, is the preferred reaction medium, even if consequently equipment fit for high pressures must be then used.

Since in many reactions, digestions for example, pressure may rise due to the discharge of gaseous products, for security reasons the microwave reactors designs have preferred devices with sealed vessels (Fig. 3.13). Actually, the microwave applicators capable to stand for a pressure above 100 bar are rare, mainly due to the lack of suitable materials for the reactors. The most commonly used PTFE (a synthetic fluoropolymer of tetrafluoroethylene, IUPAC name: poly(1,1,2,2-tetrafluoroethylene, commerically known as Teflon®) provides high purity of the reaction medium, but has a limited thermal stability (ca. 300°C, and less in an alkaline environment). Devices in stainless steel suitable to stand up to 200 bar are offered by “single reaction chamber technology”, MILESTONE, Italy. Moreover, several publications showed useful applications of this specific technology under gas pressure thanks to multiple gas inlets. Previous

technologies did not allow to work safely at high pressure and with different gas mixtures (CO_2, CO + N_2, H_2 + N_2 or Ar etc.).

In any case the final user is requested to strongly respect the instructions and limitation producer of the microwave device, specially when pressurized reactions are involved.

3.7.2.1 Expanding the range of parameters achieved by microwave reactors

Typical designs of microwave devices pose certain limitations for their users. In particular, it is difficult to seal them so as to make them fit for enhanced pressures. Because the course of many reactions, especially those related to digestion (decomposition) of laboratory samples or solvothermal syntheses, depends on increased temperature (and the corresponding pressure), appropriate reactor design solutions have been developed [19]. The main limitations are still properties of the materials, of which the reaction containers can be made. Containers made of PTFE can withstand up to 270°C and 100 bar and, when used as inner liner for steel vessel, it can reach up to 200 bar [15]. Containers made of quartz can be used at higher temperatures (even up to 700°C), but their low mechanical strength limits the pressures range down to 100 bar. In special cases, again when inserted into larger pressurized chambers, as in the already mentioned "single reaction chamber technology", these limitations can be overwhelmed and pressure as high as 200 bar can be reached [15].In rare cases manufacturers specify higher performance parameters. This is possible when the entire reactor is made of steel, which, unfortunately, is not recommended in clean chemical processes, and additionally requires the use of non-standard sealed microwave power supply systems.

3.7.3 Power control

Depending on the application microwave heating units may have pulse-, phase- or non-controlled magnetrons. For pulse controlled magnetrons, the microwave power is constantly switched on and off to achieve an average power of the desired value. Phase controlled magnetrons can be adjusted continuously between typically 15% and 100% of its maximum power. Non-controlled magnetrons are either switched on at full power or off.

The choice which kind of control is used depends on the application. For applications that require good control of the incident power, like laboratory applications or those with fast changing throughputs, either pulse- or phase-control is used. For industrial applications with constant throughputs, it is usually sufficient to use non-controlled magnetrons. The number of activated magnetrons is set during process development and saved in the PLC (programmable logic controller or programmable controller) program.

3.8 Maintenance

Microwave applicators for the chemical lab are complex and sensitive pieces of equipment. In order to cool themselves, they will typically draw in outside air. As a result, keeping acidic or corrosive materials in the same area as the microwave (such as in a fume hood) will be detrimental to the function of the microwave.

Keep your microwave out of fume hoods and away from corrosives to keep the electronics happy.

If this cannot be avoided, some vendors may have a solution to pull cooling air from another source, to help protect the microwave electronics.

Regularly inspecting the vessel for wear and tear is also important; most manufacturers provide specific guidelines for what to look for when inspecting the vessel. You'll also want to make sure you put the vessel together correctly and don't put in too much sample.

3.9 Safety issue

At radio and microwave frequencies, electric and magnetic fields are considered together as the two components of an electromagnetic wave. Power density, measured in watts per square metre (W/m^2), describes the intensity of these fields.

Low frequency and high frequency electromagnetic waves affect the human body in different ways. The main effect of radiofrequency electromagnetic fields is heating of body tissues.

There is no doubt that short-term exposure to very high levels of electromagnetic fields can be harmful to health. Current public concern focuses on possible long-term health effects caused by exposure to electromagnetic fields at levels below those required to trigger acute biological responses.

Laboratory scale microwave ovens operate at very high power levels, similar to those of domestic ovens. However, effective shielding reduces leakage outside the ovens to almost non-detectable levels and all the producers nowadays respect the current regulation and labilling requirements for user safety. Furthermore microwave leakage falls very rapidly with increasing distance from the oven. Many countries have manufacturing standards that specify maximum leakage levels for new ovens; an oven that meets the manufacturing standards will not present any hazard to the consumer.

WHO's International EMF Project was launched to provide scientifically sound and objective answers to public concerns about possible hazards of low level electromagnetic fields [20]. Despite extensive research, to date there is no evidence to conclude that exposure to low level electromagnetic fields is harmful to human health.

3.10 Conclusions

Microwave applicators are very complex piece of equipments, but to be used daily in the chemical lab, their constructive features need to be known as is for the material/microwave interaction physics. A schematic of a complete microwave applicator is presented in Figure 3.14.

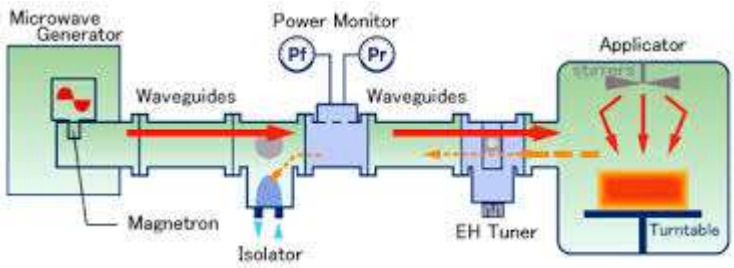

Fig. 3.14 Complete microwave applicator, from left: magnetron (microwave source), metallic waveguide (transmission line for high power microwave radiation), insulator (device to avoid the radiation to return onto the magnetron); power monitor device (device to measure forward power =Pf and reflected power =Pr, and the absorbed power from part of the sample as difference); tuner (device to optimize the position

of the electric field=E and the magnetic field=H on the sample); and applicator (in this case, a multimode cavity is represented).

As a conclusive remark of this Chapter, some general parameters that characterize the modern microwave applicators designed for chemical syntheses, digestions, extraction and so on can be simplified as listed:

- High Durability
- Low Maintenance
- Intuitive Controls and Software
- Speed of Heating
- Large Capacity in terms of volume and weight
- Short Cool-Down Time

Some suggestions concerning the decision makers in terms of acquisition of new laboratory equipments are the parameters related to commercialization of microwave ovens for the chemical lab:

- Price
- Vendor Reputation
- Service and Support

Besides equipment cost, reputation of the supplier and service support, the choice of the equipment should of course consider the user's needs. For example, the reaction volume, the pressure range, the use of gas, or the need to work with special glassware etc.

3.11 References and suggested readings

1. A. Loupy, Microwaves in Organic Synthesis, 2nd Edition, Wiley-VCH, November 2006, ISBN: 978-3-527-31452-2.

2. C. Oliver Kappe, Doris Dallinger, Shaun S. Murphree Practical Microwave Synthesis for Organic Chemists, Wiley-VCH, November 2008, ISBN: 978-3-527-32097-4.

3. S. Horikoshi, N. Serpone, Microwaves in Catalysis: Methodology and Applications, John Wiley & Sons, September 2015, ISBN: 978-3-527-68814-2.

4. S. Horikoshi, N. Serpone, Microwaves in Nanoparticle Synthesis: Fundamentals and Applications, John Wiley & Sons, May 2013, ISBN: 978-3-527-64814-6.

5. A.C.Metaxas, Foundations of Electroheat: A Unified Approach, John Wiley & Sons, 1996;

6. National Research Council (U.S.). Committee on Microwave Processing of Materials: An Emerging Industrial Technology.; National Research Council (U.S.). National Materials Advisory Board.; National Research Council (U.S.). Commission on Engineering and Technical Systems. Microwave Processing of Materials, National Academies Press, February 1994, ISBN: 9780309050272. doi:10.17226/2266. ×. Open Source: https://www.nap.edu/read/2266/chapter/1.

7. L. F. Chen, C. K. Ong, C. P. Neo, V. V. Varadan, Vijay K. Varadan, Microwave Electronics: Measurement and Materials Characterization, John Wiley & Sons, 2004, ISBN: 9780470020456.

8 D. Stuerga, Microwave–Material Interactions and Dielectric Properties, Key Ingredients for Mastery of Chemical Microwave Processes, in Microwaves in Organic Synthesis, Second edition. Edited by A. Loupy, WILEY-VCH Verlag GmbH & Co. KGaA, Weinheim. 2006, ISBN: 3-527-31452-0.

9. Menéndez, J.A.; Arenillas, A.; Fidalgo, B.; Fernández, Y.; Zubizarreta, L.; Calvo, E.G.; Bermúdez, J.M., Microwave heating processes involving carbon materials. Fuel Process. Technol. 91 (2010) 1–8.

10. Haque, K.E. Microwave energy for mineral treatment processes—A brief review. Int. J. Miner. Process. 57 (1999) 1–24.

11. K. Umeysu, Y. Tomizawa, Designing of Microwave Applicators by Electromagnetic Wave Analysis, NIPPON STEEL Technical Report No. 89 January 2004, 74.

12. B.R. McAvoy, Solid-state microwave oven, US Patent 3557333, 1971.

13. E. Schwartz, Historical Notes on Solid-State Microwave Heating, AMPERE Newsletter, 89 (2016) 4-7, open source: https://drive.google.com/file/d/0B6OqoiA18sYDVGpldkZKZ2F0ZkE/view.

14. I.Longo, Microwave Chemical Reactor, US Patent 20120103978, 2012.

15. W. Lautenschlager, High Pressure Vessel, US Patent 9132406B2, 2015.

16. Leonelli, C., Łojkowski, W. Main development directions in the application of microwave irradiation to the synthesis of nanopowders, Chemistry Today, 25(3) (2007) 34-38, (and refrences therein reported).

17. Smith, F. E., Arsenault, E. A., Microwave-assisted sample preparation in analytical chemistry, Talanta, 43(8) (1996) 1207–1268.

18. Hoz A., Díaz-Ortiz A., Moreno A., Review on non-thermal effects of microwave irradiation in organic synthesis, Journal of Microwave Power & Electromagnetic Energy, 41(1) (2007) 45-66.

19. Łojkowski W., Chudoba T., Reszke E., Majcher A., Mazurkiewicz A., Sibera D., Opalinska A., Leonelli C., Synthesis of nanoparticles and doped nanoparticles using novel microwave reactors. Proceeding of EuroNanoForum 2009. Nanotechnology for Sustainable Economy. European and International Forum on Nanotechnology. Prague July 2009, p. 181.

20. WHO-World Health Organization, What are electromagnetic fields?, http://www.who.int/peh-emf/about/WhatisEMF/en/index1.html.